LM124, LM224x, LM324x

Datasheet

Low-power quad operational amplifiers

QFN16 3x3

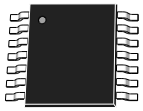

TSSOP14

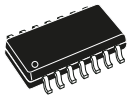

SO14

Features

- Wide gain bandwidth: 1.3 MHz
- Input common mode voltage range includes ground
- Large voltage gain: 100 dB
- Very low supply current/amplifier: 375 µA
- Low input bias current: 20 nA
- Low input voltage: 3 mV max.
- Low input offset current: 2 nA
- Wide power supply range:
  - Single supply: 3 V to 30 V
  - Dual supplies: ±1.5 V to ±15 V

Related products

- See TSB572 and TSB611, 36 V newer technology devices, which have enhanced accuracy and ESD rating, reduced power consumption, and automotive grade qualification
- See LM2902 and LM2902W for automotive grade applications

Description

The LM124, LM224x and LM324x consist of four independent, high gain operational amplifiers with frequency compensation implemented internally. They operate from a single power supply over a wide range of voltages.

Operation from split power supplies is also possible and the low-power supply current drain is independent of the magnitude of the power supply voltage.

Product status link
LM124, LM224x, LM324x

Product reference	Part numbers
LM124[1]	LM124
LM224x	LM224, LM224A[2], LM224W[3]
LM324x	LM324, LM324A, LM324W[3]

1. *Prefixes: LM1, LM2, and LM3 refer to temperature range*
2. *Suffix A refers to enhanced Vio performance*
3. *Suffix W refers to enhanced ESD ratings.*

1 Pin connections and schematic diagram

Figure 1. Pin connections (top view)

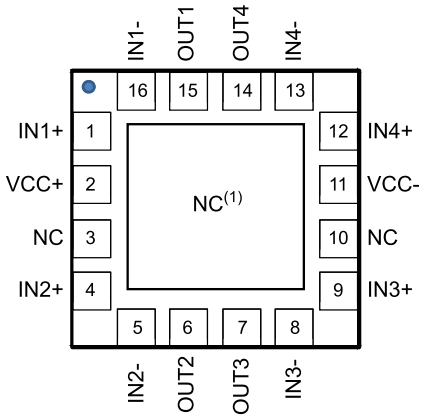

QFN16 3x3

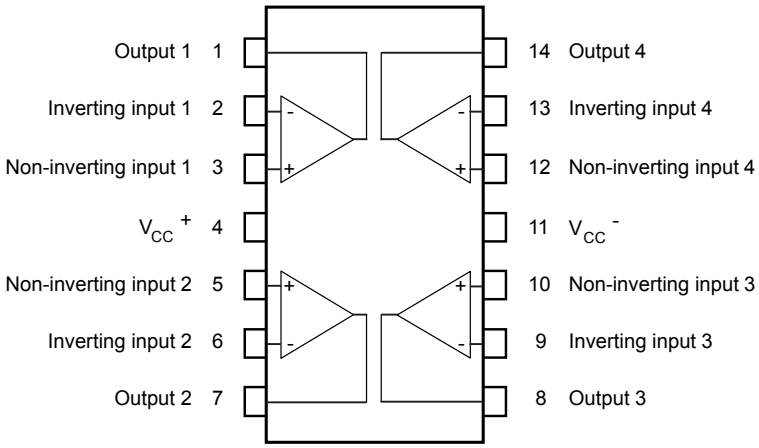

TSSOP14/SO14

1. The exposed pads of the QFN16 3x3 can be connected to VCC- or left floating

Figure 2. Schematic diagram (LM224A, LM324A, LM224W, LM324W, one channel)

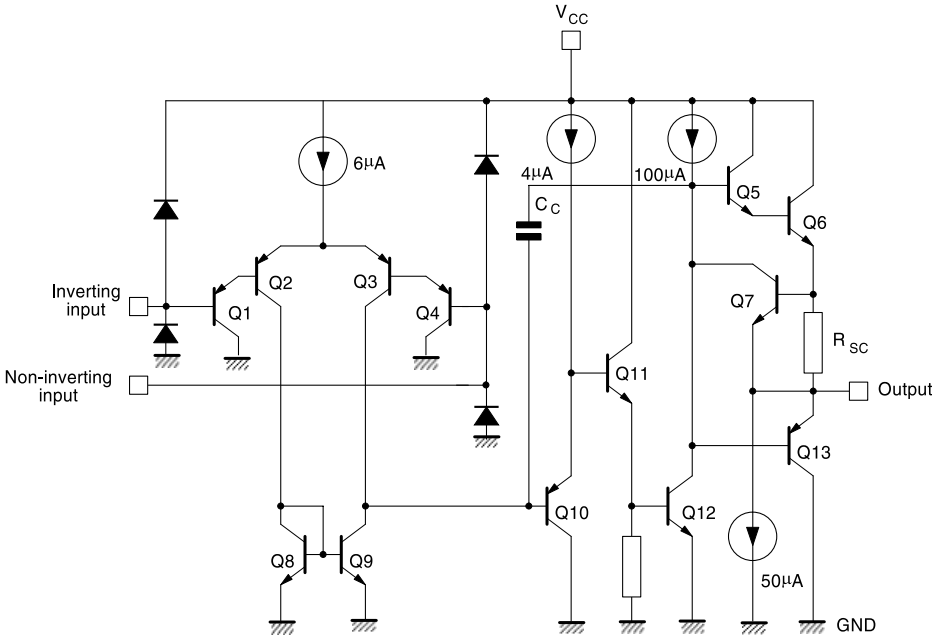

Figure 3. Schematic diagram (LM124, LM224, LM324, one channel)

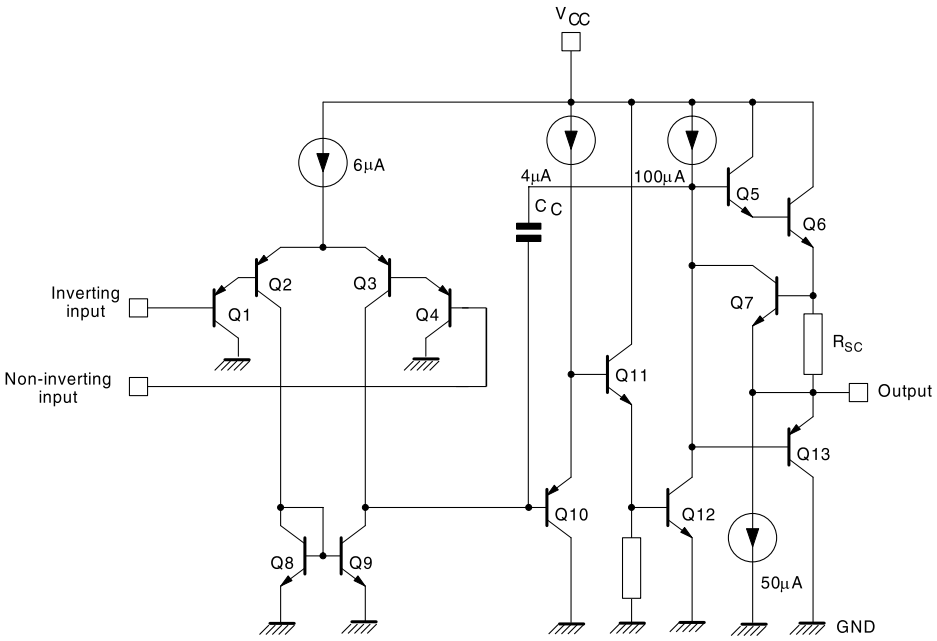

2 Absolute maximum ratings and operating conditions

Table 1. Absolute maximum ratings

Symbol	Parameter		Value	Unit
V_{CC}	Supply voltage		±16 or 32	V
V_i	Input voltage LM224A, LM324A, LM224W, LM324W		-0.3 to V_{CC} + 0.3	
	Input voltage LM124, LM224, LM324		-0.3 to 32	
V_{id}	Differential input voltage [1]		32	
P_{tot}	Power dissipation: D suffix		400	mW
	Output short-circuit duration [2]		Infinite	
I_{in}	Input current [3]		50	mA
T_{stg}	Storage temperature range		-65 to 150	°C
T_j	Maximum junction temperature		150	
R_{thja}	Thermal resistance junction to ambient [4]	QFN16 3x3	45	°C/W
		TSSOP14	100	
		SO14	103	
R_{thjc}	Thermal resistance junction to case	QFN16 3x3	14	
		TSSOP14	32	
		SO14	31	
ESD	HBM: human body model [5]	LM224A, LM324A	800	V
		LM224W, LM324W	700	
		LM124, LM224, LM324	250	
	MM: machine model [6]		100	
	CDM: charged device model		1500	

1. *Neither of the input voltages must exceed the magnitude of (V_{CC}^{+}) or (V_{CC}^{-}).*
2. *Short-circuits from the output to V_{CC} can cause excessive heating if V_{CC} > 15 V. The maximum output current is approximately 40 mA independent of the magnitude of V_{CC}. Destructive dissipation can result from simultaneous short-circuits on all amplifiers.*
3. *This input current only exists when the voltage at any of the input leads is driven negative. It is due to the collector-base junction of the input PNP transistor becoming forward biased and thereby acting as an input diode clamp. In addition to this diode action, there is also an NPN parasitic action on the IC chip. This transistor action can cause the output voltages of the op amps to go to the V_{CC} voltage level (or to ground for a large overdrive) for the time during which an input is driven negative. This is not destructive and normal output starts up again for input voltages higher than -0.3 V.*
4. *Short-circuits can cause excessive heating. Destructive dissipation can result from simultaneous short-circuits on all amplifiers. These are typical values given for a single layer board (except for TSSOP which is a two-layer board).*
5. *Human body model: 100 pF discharged through a 1.5 kΩ resistor between two pins of the device, done for all couples of pin combinations with other pins floating.*
6. *Machine model: a 200 pF cap is charged to the specified voltage, then discharged directly between two pins of the device with no external series resistor (internal resistor < 5 Ω), done for all couples of pin combinations with other pins floating.*

Table 2. Operating conditions

Symbol	Parameter		Value	Unit
V_{CC}	Supply voltage	Single supply	3 to 30	V
		Dual supply	±1.5 to ±15	
V_{ICM}	Common-mode input voltage range Tamb= 25 °C		0 to V_{CC} - 1.5	
	Common-mode input voltage range Tmin. ≤ Tamb ≤ Tmax.		0 to V_{CC} -2	
T_{Oper}	Operating temperature range	LM124	-55 to 125	°C
		LM224	-40 to 105	
		LM324	0 to 70	

3 Electrical characteristics

Table 3. V_{CC+} = 5 V, V_{CC-} = ground, V_o = 1.4 V, T_{amb} = 25 °C (unless otherwise specified)

Symbol	Parameter			Min.	Typ.	Max.	Unit
V_{io} LM224A, LM324A, LM224W, LM324W	Input offset voltage [1]	T_{amb} = 25 °C			2	3	mV
		$T_{min} \leq T_{amb} \leq T_{max}$				5	
V_{io} LM124, LM224, LM324		T_{amb} = 25 °C	LM124		2	5	
			LM224				
			LM324		2	7	
		$T_{min} \leq T_{amb} \leq T_{max}$	LM124			7	
			LM224				
			LM324			9	
I_{io}	Input offset current	T_{amb} = 25 °C			2	20	nA
		$T_{min} \leq T_{amb} \leq T_{max}$				40	
I_{ib}	Input bias current [2]	T_{amb} = 25 °C			20	100	
		$T_{min} \leq T_{amb} \leq T_{max}$				200	
A_{vd}	Large signal voltage gain, V_{CC+}= 15 V, R_L = 2 kΩ, V_o = 1.4 V to 11.4 V	T_{amb} = 25 °C		50	100		V/mV
		$T_{min} \leq T_{amb} \leq T_{max}$		25			
SVR	Supply voltage rejection ratio, $R_s \leq$ 10 kΩ, V_{CC+}= 5 V to 30 V	T_{amb} = 25 °C		65	110		dB
		$T_{min} \leq T_{amb} \leq T_{max}$		65			
I_{CC}	Supply current, all amps, no load	T_{amb} = 25 °C, V_{CC} = 5V			0.7	1.2	mA
		T_{amb} = 25 °C, V_{CC} = 30 V			1.5	3	
		$T_{min} \leq T_{amb} \leq T_{max}$, V_{CC} = 5 V			0.8	1.2	
		$T_{min} \leq T_{amb} \leq T_{max}$, V_{CC} = 30 V			1.5	3	
V_{icm}	Input common mode voltage range [3]	V_{CC} = 30 V, T_{amb} = 25 °C		0		28.5	V
		V_{CC} = 30 V, $T_{min} \leq T_{amb} \leq T_{max}$		0		28	
CMR	Common mode rejection ratio, $R_s \leq$ 10 kΩ	T_{amb} = 25 °C		70	80		dB
		$T_{min} \leq T_{amb} \leq T_{max}$		60			
I_{source}	Output current source, V_{id} = 1 V	V_{CC} = 15 V, V_o = 2 V		20	40	70	mA
I_{sink}	Output sink current, V_{id} = -1 V	V_{CC} = 15 V, V_o = 2 V		10	20		
		V_{CC} = 15 V, V_o = 0.2 V		12	50		µA

Symbol	Parameter			Min.	Typ.	Max.	Unit
V_{OH}	High level output voltage, V_{CC} = 30 V, R_L = 2 kΩ	T_{amb} = 25 °C		26	27		V
		$T_{min} \leq T_{amb} \leq T_{max}$		26			
	High level output voltage, V_{CC} = 30 V, R_L = 10 kΩ	T_{amb} = 25 °C		27	28		
		$T_{min} \leq T_{amb} \leq T_{max}$		27			
	High level output voltage, V_{CC} = 5 V, R_L = 2 kΩ	T_{amb} = 25 °C		3.5			
		$T_{min} \leq T_{amb} \leq T_{max}$		3			
V_{OL}	Low level output voltage, R_L = 10 kΩ	T_{amb} = 25 °C			5	20	mV
		$T_{min} \leq T_{amb} \leq T_{max}$				20	
SR	Slew rate	V_{CC} = 15 V, V_i = 0.5 to 3 V, R_L = 2 kΩ, C_L = 100 pF, unity gain			0.4		V/µs
GBP	Gain bandwidth product	V_{CC} = 30 V, f = 100 kHz, V_{in}=10 mV, R_L = 2 kΩ, C_L=100 pF			1.3		MHz
THD	Total harmonic distortion	f = 1kHz, A_v = 20 dB, R_L = 2 kΩ, V_o = 2 V_{pp}, C_L = 100 pF, V_{CC}=30 V			0.015		%
e_n	Equivalent input noise voltage	f = 1 kHz, R_s = 100 Ω, V_{CC} = 30 V			40		nV/√Hz
DV_{io}	Input offset voltage drift				7	30	µV/°C
DI_{io}	Input offset current drift				10	200	pA/°C
V_{o1}/V_{o2}	Channel separation (4)	1 kHz ≤ f ≤ 20 kHZ			120		kHz

1. *V_o = 1.4 V, R_s = 0 Ω, 5 V < V_{CC}^+ < 30 V, 0 < V_{ic} < V_{CC}^+ - 1.5 V*
2. *The direction of the input current is out of the IC. This current is essentially constant, independent of the state of the output so there is no load change on the input lines.*
3. *The input common-mode voltage of either input signal voltage should not be allowed to go negative by more than 0.3 V. The upper end of the common-mode voltage range is (V_{CC}^+) - 1.5 V, but either or both inputs can go to 32 V without damage.*
4. *Due to the proximity of external components, ensure that there is no coupling originating from stray capacitance between these external parts. Typically, this can be detected at higher frequencies because this type of capacitance increases.*

4 Electrical characteristic curves

Figure 4. Input bias current vs. temperature

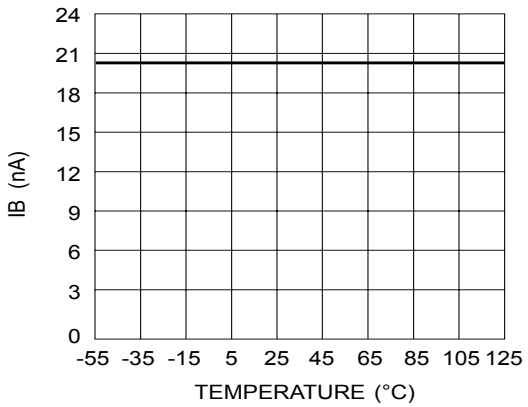

Figure 5. Output current limitation

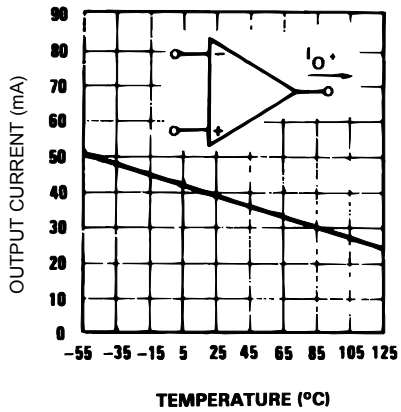

Figure 6. Input voltage range

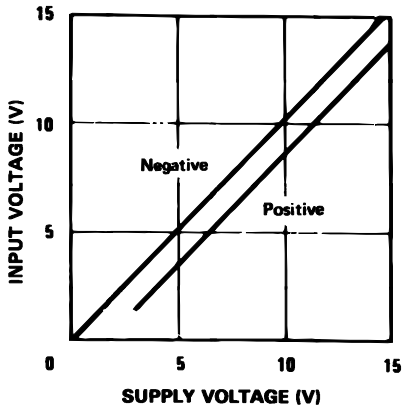

Figure 7. Supply current vs. supply voltage

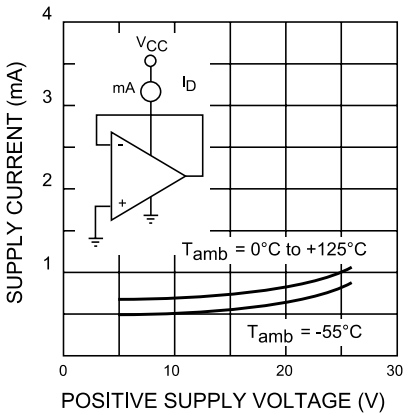

Figure 8. Gain bandwidth product vs. temperature

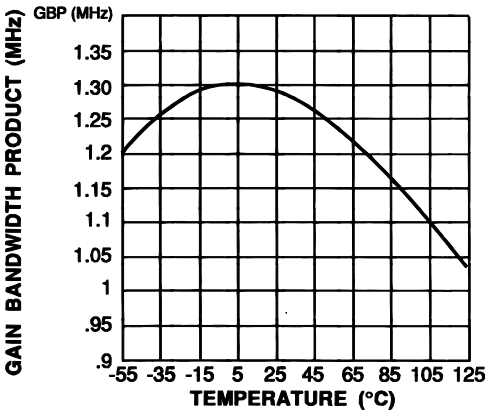

Figure 9. Common-mode rejection ratio

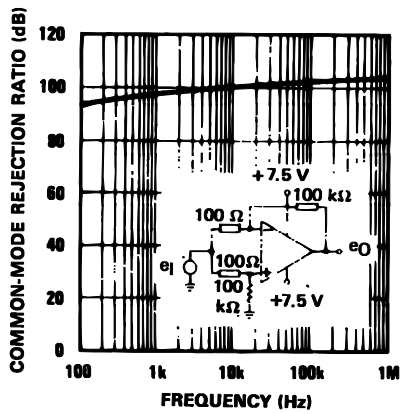

Figure 10. Open loop frequency response

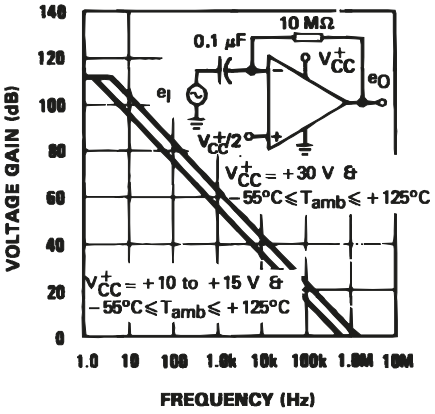

Figure 11. Large signal frequency response

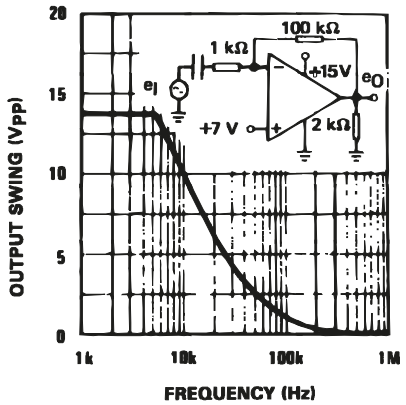

Figure 12. Voltage follower pulse response

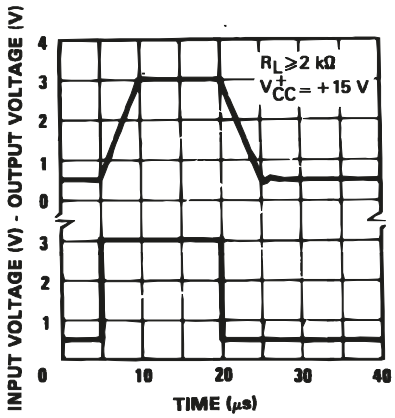

Figure 13. Output characteristics (current sinking)

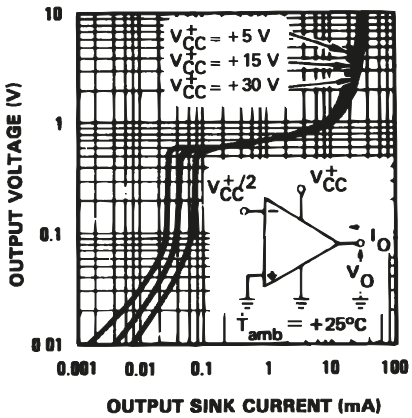

Figure 14. Voltage follower pulse response (small signal)

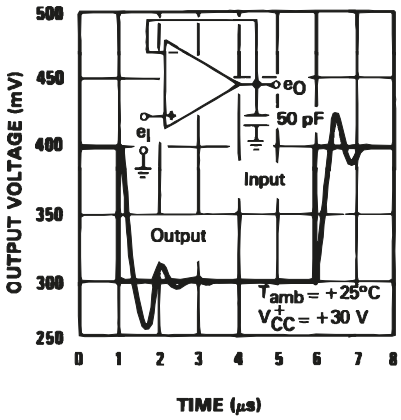

Figure 15. Output characteristics (current sourcing)

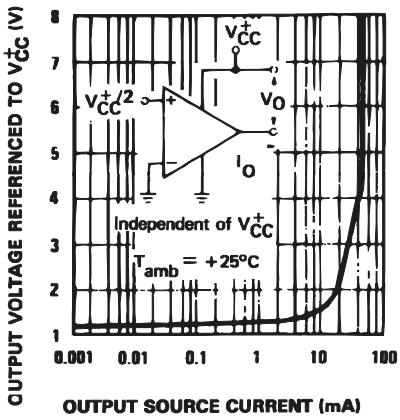

Figure 16. Input current vs. supply voltage

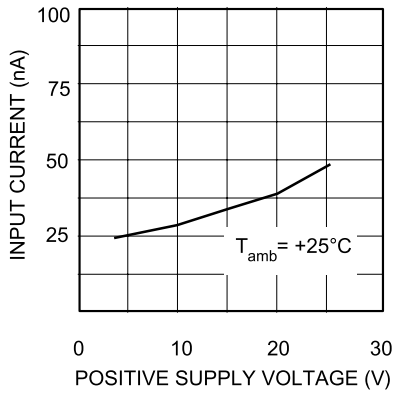

Figure 17. Large signal voltage gain vs. temperature

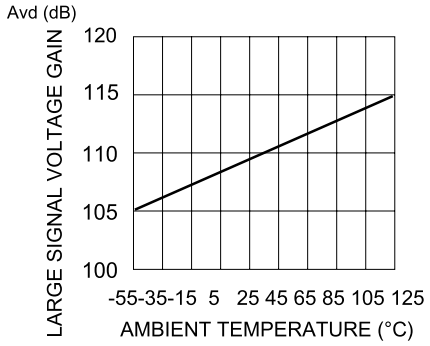

Figure 18. Power supply and common mode rejection ratio vs. temperature

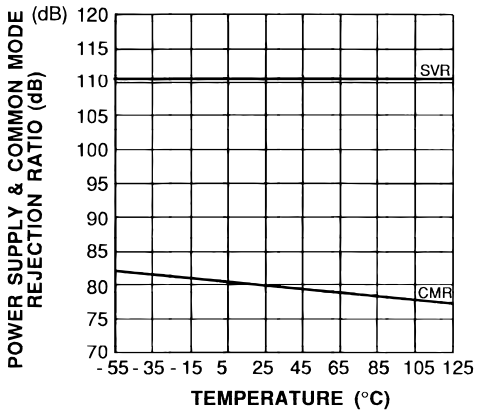

Figure 19. Voltage gain vs. supply voltage

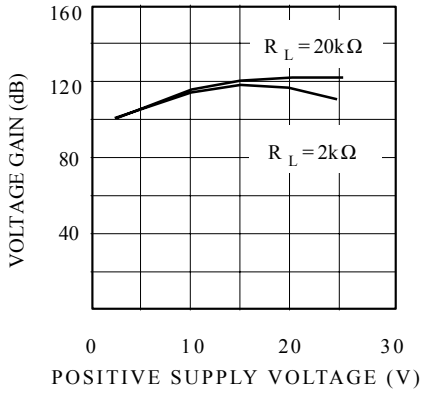

5 Typical single-supply applications

Figure 20. AC coupled inverting amplifier

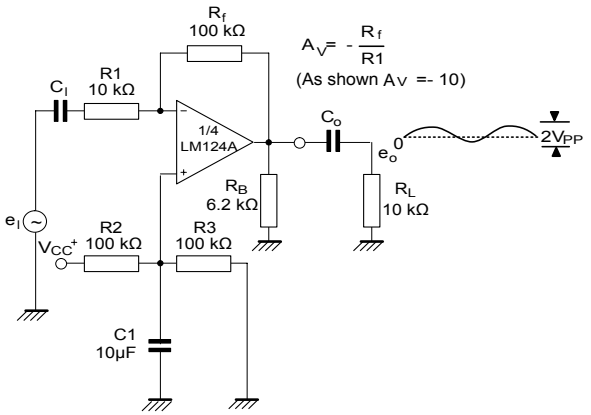

Figure 21. High input Z adjustable gain DC instrumentation amplifier

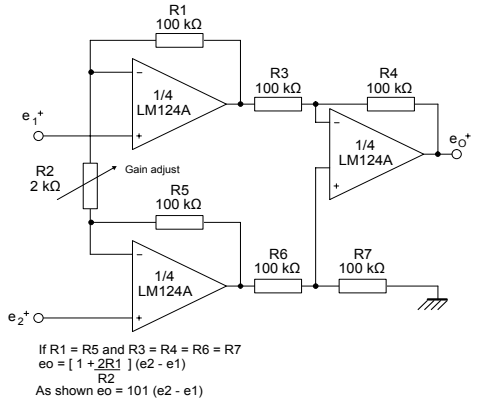

Figure 22. AC coupled non inverting amplifier

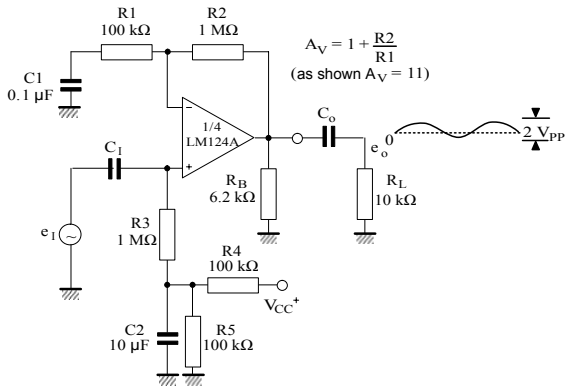

Figure 23. DC summing amplifier

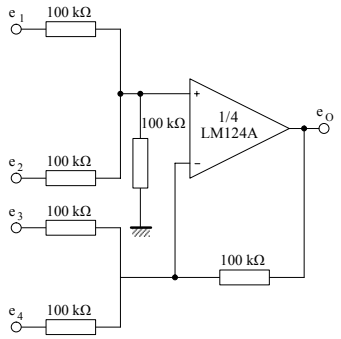

Figure 24. Non-inverting DC gain

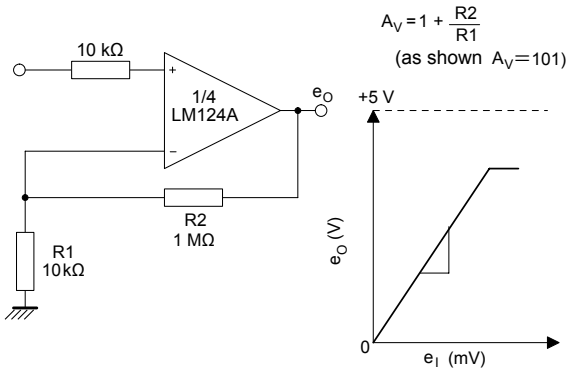

Figure 25. Low drift peak detector

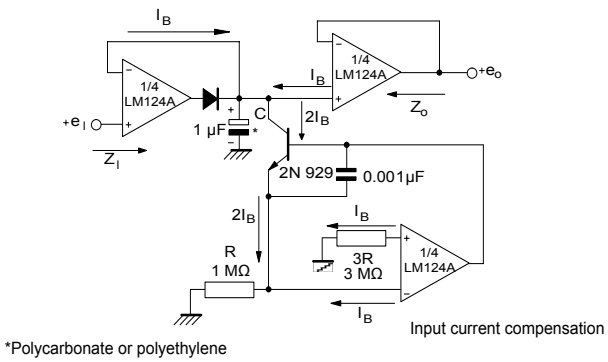

Figure 26. Active bandpass filter

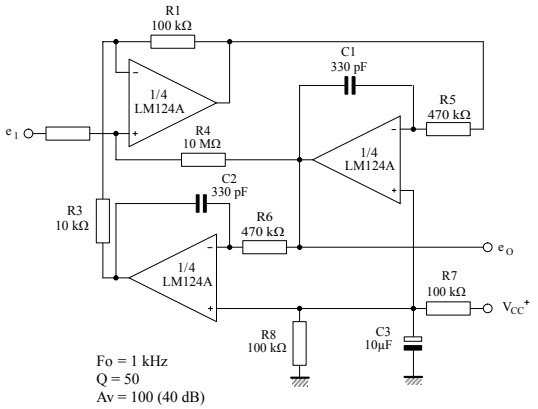

Figure 27. High input Z, DC differential amplifier

For $\frac{R_1}{R_2} = \frac{R_4}{R_3}$ CMRR depends on the following resistor ration match

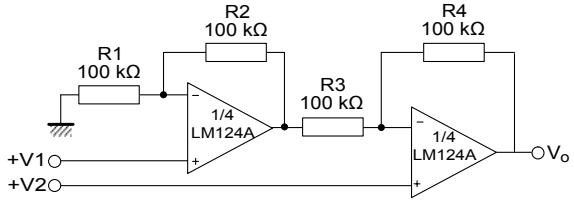

$Vo = (1 + \frac{R4}{R3})(V2 - V1)$

As shown Vo = 2 * (V2 - V1)

Figure 28. Using symmetrical amplifiers to reduce input current (general concept)

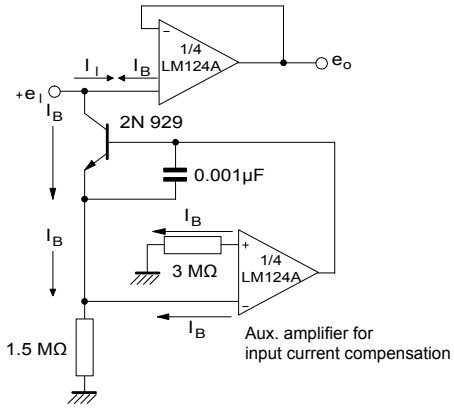

6 Package information

In order to meet environmental requirements, ST offers these devices in different grades of ECOPACK packages, depending on their level of environmental compliance. ECOPACK specifications, grade definitions and product status are available at: www.st.com. ECOPACK is an ST trademark.

6.1 QFN16 3x3 package information

Figure 29. QFN16 3x3 package outline

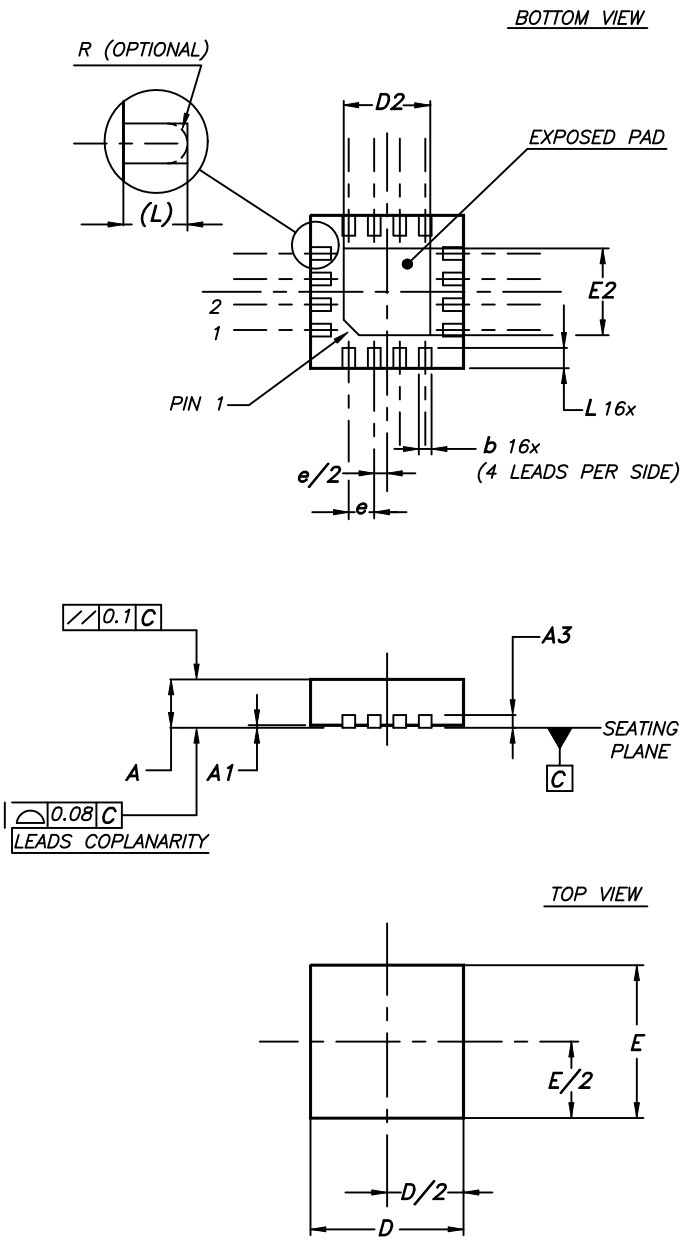

Table 4. QFN16 3x3 mechanical data

Ref.	Dimensions					
	Millimeters			Inches		
	Min.	Typ.	Max.	Min.	Typ.	Max.
A	0.80	0.90	1.00	0.031	0.035	0.039
A1	0		0.05	0		0.002
A3		0.20			0.008	
b	0.18		0.30	0.007		0.012
D	2.90	3.00	3.10	0.114	0.118	0.122
D2	1.50		1.80	0.059		0.071
E	2.90	3.00	3.10	0.114	0.118	0.122
E2	1.50		1.80	0.059		0.071
e		0.50			0.020	
L	0.30		0.50	0.012		0.020

Figure 30. QFN16 3x3 recommended footprint

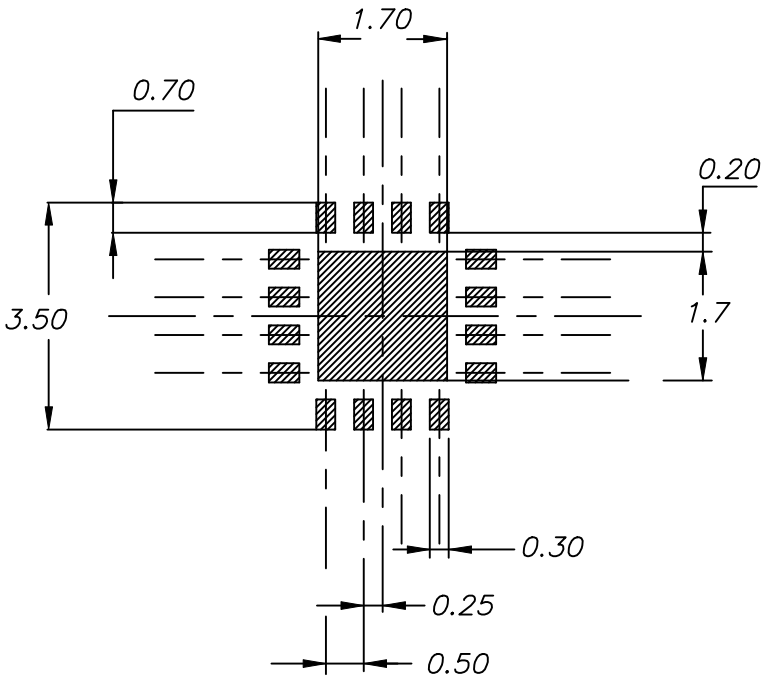

6.2 TSSOP14 package information

Figure 31. TSSOP14 package outline

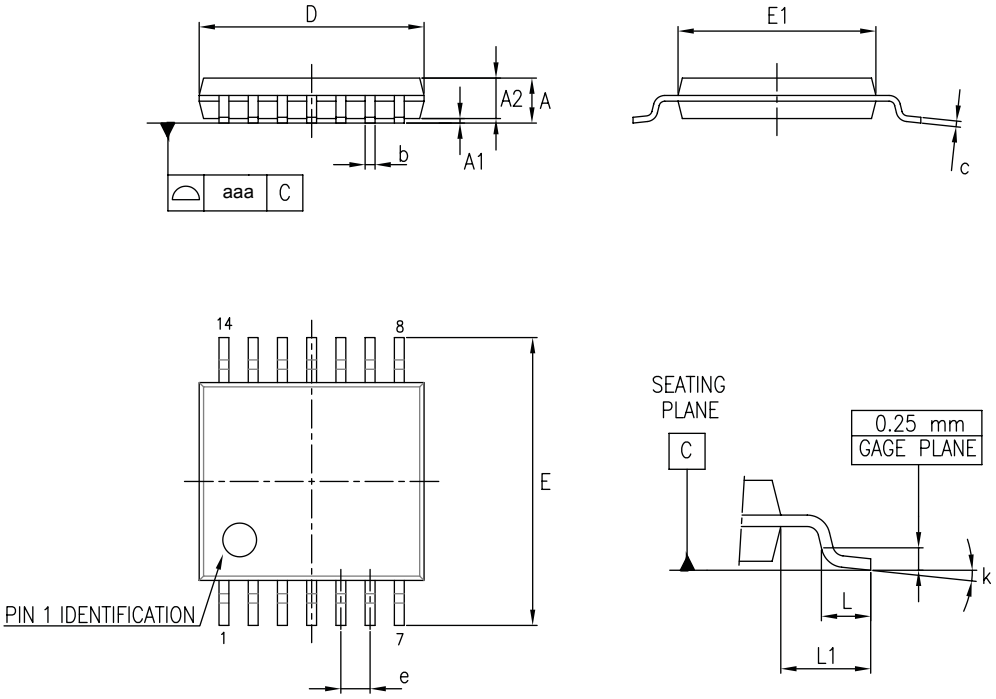

Table 5. TSSOP14 package mechanical data

Ref.	Dimensions					
	Millimeters			Inches		
	Min.	Typ.	Max.	Min.	Typ.	Max.
A			1.20			0.047
A1	0.05		0.15	0.002	0.004	0.006
A2	0.80	1.00	1.05	0.031	0.039	0.041
b	0.19		0.30	0.007		0.012
c	0.09		0.20	0.004		0.0089
D	4.90	5.00	5.10	0.193	0.197	0.201
E	6.20	6.40	6.60	0.244	0.252	0.260
E1	4.30	4.40	4.50	0.169	0.173	0.176
e		0.65			0.0256	
L	0.45	0.60	0.75	0.018	0.024	0.030
L1		1.00			0.039	
k	0°		8°	0°		8°
aaa			0.10			0.004

6.3 SO14 package information

Figure 32. SO14 package outline

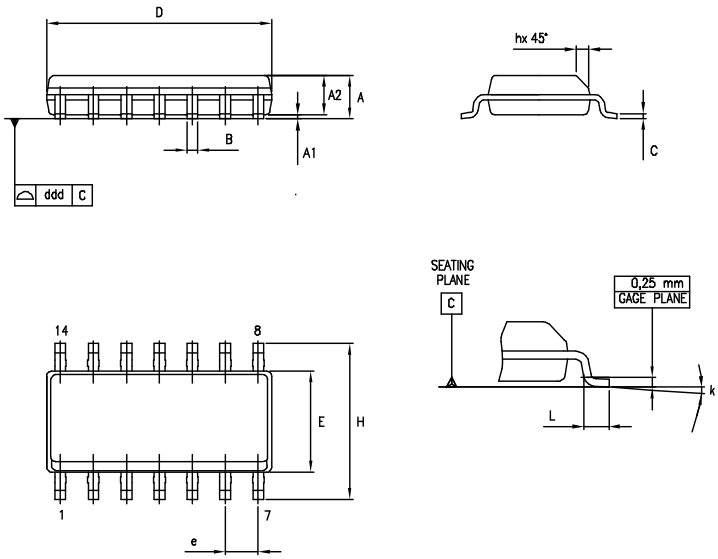

Table 6. SO14 package mechanical data

Ref.	Dimensions					
	Millimeters			Inches		
	Min.	Typ.	Max.	Min.	Typ.	Max.
			1.75			0.069
A	1.35		1.75	0.05		0.068
A1	0.10		0.25	0.004		0.009
A2	1.10		1.65	0.04		0.06
B	0.33		0.51	0.01		0.02
C	0.19		0.25	0.007		0.009
D	8.55		8.75	0.33		0.34
E	3.80		4.0	0.15		0.15
e		1.27			0.05	
H	5.80		6.20	0.22		0.24
h	0.25		0.50	0.009		0.02
L	0.40		1.27	0.015		0.05
k	8° (max.)					
ddd			0.10			0.004

7 Ordering information

Table 7. Order codes

Order code	Temperature range	ESD (HBM, CDM)	V_{io} max. @ 25 °C	Package	Marking
LM124DT	-55 °C to 125 °C	250 V, 1.5 kV	5 mV	SO14	124
LM224ADT	-40 °C to 105 °C	800 V, 1.5 kV	3 mV	SO14	224A
LM224APT				TSSOP14	
LM224DT		250 V, 1.5 kV	5 mV	SO14	224
LM224PT				TSSOP14	
LM224QT				QFN16 3x3	K425
LM224WDT		700 V, 1.5 kV	3 mV	SO14	224W
LM324ADT	0 °C to 70 °C	800 V, 1.5 kV		SO14	324A
LM324APT				TSSOP14	
LM324AWDT		700 V, 1.5 kV		SO14	324AW
LM324AWPT				TSSOP14	
LM324WDT				SO14	324W
LM324WPT				TSSOP14	
LM324DT		250 V, 1.5 kV	5 mV	SO14	324
LM324PT				TSSOP14	
LM324QT				QFN16 3x3	K427

Revision history

Table 8. Document revision history

Date	Revision	Changes
1-Mar-2001	1	First release
1-Feb-2005	2	Added explanation of V_{id} and V_i limits in Table 2 on page 4. Updated macromodel.
1-Jun-2005	3	ESD protection inserted in Table 2 on page 4.
25-Sep-2006	4	Editorial update.
22-Aug-2013	5	Removed DIP package and all information pertaining to it Table 1: Device summary: Removed order codes LM224AN, LM224AD, LM324AN, and LM324AD; updated packaging. Table 2: Absolute maximum ratings: removed N suffix power dissipation data; updated footnotes 5 and 6. Renamed Figure 3, Figure 4, Figure 6, Figure 7, Figure 16, Figure 17, Figure 18, and Figure 19. Updated axes titles of Figure 4, Figure 5, Figure 7, and Figure 17. Removed duplicate figures. Removed Section 5: Macromodels
06-Dec-2013	6	Table 2: Absolute maximum ratings: updated ESD data for HBM and MM.
10-Jun-2016	7	LM124, LM224, LM324 and LM224W, LM324W datasheets merged with LM224A, LM324A datasheet. The following sections were reworked: Features, Description, Section 1: "Pin connections and schematic diagram", Section 2: "Absolute maximum ratings and operating conditions", and Section 3: "Electrical characteristics". The following sections were added: Related products and Section 7: "Ordering information". Packaged silhouettes, pin connections, and mechanical data were standardized and updated.
09-Sep-2019	8	Updated cover page, Section 2 Absolute maximum ratings and operating conditions and Table 3. V_{CC+} = 5 V, V_{CC-} = ground, V_o = 1.4 V, T_{amb} = 25 °C (unless otherwise specified). Updated Figure 2. Schematic diagram (LM224A, LM324A, LM224W, LM324W, one channel) and Figure 3. Schematic diagram (LM124, LM224, LM324, one channel).

Contents

1 Pin connections and schematic diagram 2
2 Absolute maximum ratings and operating conditions 4
3 Electrical characteristics. 6
4 Electrical characteristic curves 8
5 Typical single-supply applications 11
6 Package information. 13
6.1 QFN16 3x3 package information. 13
6.2 TSSOP14 package information 14
6.3 SO14 package information. 15
7 Ordering information 17
Revision history 18

List of tables

Table 1. Absolute maximum ratings . . . 4
Table 2. Operating conditions . . . 5
Table 3. V_{CC+} = 5 V, V_{CC-} = ground, V_o = 1.4 V, T_{amb} = 25 °C (unless otherwise specified) . . . 6
Table 4. QFN16 3x3 mechanical data . . . 14
Table 5. TSSOP14 package mechanical data . . . 15
Table 6. SO14 package mechanical data . . . 16
Table 7. Order codes . . . 17
Table 8. Document revision history . . . 18

List of figures

Figure 1. Pin connections (top view) . . . 2
Figure 2. Schematic diagram (LM224A, LM324A, LM224W, LM324W, one channel) . . . 3
Figure 3. Schematic diagram (LM124, LM224, LM324, one channel) . . . 3
Figure 4. Input bias current vs. temperature . . . 8
Figure 5. Output current limitation . . . 8
Figure 6. Input voltage range . . . 8
Figure 7. Supply current vs. supply voltage . . . 8
Figure 8. Gain bandwidth product vs. temperature . . . 8
Figure 9. Common-mode rejection ratio . . . 8
Figure 10. Open loop frequency response . . . 9
Figure 11. Large signal frequency response . . . 9
Figure 12. Voltage follower pulse response . . . 9
Figure 13. Output characteristics (current sinking) . . . 9
Figure 14. Voltage follower pulse response (small signal) . . . 9
Figure 15. Output characteristics (current sourcing) . . . 9
Figure 16. Input current vs. supply voltage . . . 10
Figure 17. Large signal voltage gain vs. temperature . . . 10
Figure 18. Power supply and common mode rejection ratio vs. temperature . . . 10
Figure 19. Voltage gain vs. supply voltage . . . 10
Figure 20. AC coupled inverting amplifier . . . 11
Figure 21. High input Z adjustable gain DC instrumentation amplifier . . . 11
Figure 22. AC coupled non inverting amplifier . . . 11
Figure 23. DC summing amplifier . . . 11
Figure 24. Non-inverting DC gain . . . 11
Figure 25. Low drift peak detector . . . 11
Figure 26. Active bandpass filter . . . 12
Figure 27. High input Z, DC differential amplifier . . . 12
Figure 28. Using symmetrical amplifiers to reduce input current (general concept) . . . 12
Figure 29. QFN16 3x3 package outline . . . 13
Figure 30. QFN16 3x3 recommended footprint . . . 14
Figure 31. TSSOP14 package outline . . . 15
Figure 32. SO14 package outline . . . 16

IMPORTANT NOTICE – PLEASE READ CAREFULLY

STMicroelectronics NV and its subsidiaries (“ST”) reserve the right to make changes, corrections, enhancements, modifications, and improvements to ST products and/or to this document at any time without notice. Purchasers should obtain the latest relevant information on ST products before placing orders. ST products are sold pursuant to ST’s terms and conditions of sale in place at the time of order acknowledgement.

Purchasers are solely responsible for the choice, selection, and use of ST products and ST assumes no liability for application assistance or the design of Purchasers’ products.

No license, express or implied, to any intellectual property right is granted by ST herein.

Resale of ST products with provisions different from the information set forth herein shall void any warranty granted by ST for such product.

ST and the ST logo are trademarks of ST. For additional information about ST trademarks, please refer to www.st.com/trademarks. All other product or service names are the property of their respective owners.

Information in this document supersedes and replaces information previously supplied in any prior versions of this document.

© 2019 STMicroelectronics – All rights reserved

Mouser Electronics

Authorized Distributor

Click to View Pricing, Inventory, Delivery & Lifecycle Information:

STMicroelectronics:

LM224D LM324AD LM324D LM224ADT LM324ADT LM224PT LM324APT LM224APT LM224DT LM124DT LM324DT LM324PT LM224QT LM324QT LM324AWDT LM324AWPT LM324WDT LM324WPT